Source .

NBS REPORT

8701

MICROWAVE DISCHARGE CAVITIES OPERATING AT 2450 MHz

F. C. Fehsenfeld, K. M. Evenson, and H. P. Broida

U. S. DEPARTMENT OF COMMERCE
NATIONAL BUREAU OF STANDARDS
BOULDER LABORATORIES
Boulder, Colorado

THE NATIONAL BUREAU OF STANDARDS

The National Bureau of Standards is a principal focal point in the Federal Government for assuring maximum application of the physical and engineering sciences to the advancement of technology in industry and commerce. Its responsibilities include development and maintenance of the national standards of measurement, and the provisions of means for making measurements consistent with those standards; determination of physical constants and properties of materials; development of methods for testing materials, mechanisms, and structures, and making such tests as may be necessary, particularly for government agencies; cooperation in the establishment of standard practices for incorporation in codes and specifications; advisory service to government agencies on scientific and technical problems; invention and development of devices to serve special needs of the Government; assistance to industry, business, and consumers in the development and acceptance of commercial standards and simplified trade practice recommendations; administration of programs in cooperation with United States business groups and standards organizations for the development of international standards of practice; and maintenance of a clearinghouse for the collection and dissemination of scientific, technical, and engineering information. The scope of the Bureau's activities is suggested in the following listing of its four Institutes and their organizational units.

Institute for Basic Standards. Electricity. Metrology. Heat. Radiation Physics. Mechanics. Applied Mathematics. Atomic Physics. Physical Chemistry. Laboratory Astrophysics.* Radio Standards Laboratory: Radio Standards Physics; Radio Standards Engineering.** Office of Standard Reference Data.

Institute for Materials Research. Analytical Chemistry. Polymers. Metallurgy. Inorganic Materials. Reactor Radiations. Cryogenics.** Office of Standard Reference Materials.

Central Radio Propagation Laboratory.** Ionosphere Research and Propagation. Troposphere and Space Telecommunications. Radio Systems. Upper Atmosphere and Space Physics.

Institute for Applied Technology. Textiles and Apparel Technology Center. Building Research. Industrial Equipment. Information Technology. Performance Test Development. Instrumentation. Transport Systems. Office of Technical Services. Office of Weights and Measures. Office of Engineering Standards. Office of Industrial Services.

---

* NBS Group, Joint Institute for Laboratory Astrophysics at the University of Colorado.
** Located at Boulder, Colorado.

NATIONAL BUREAU OF STANDARDS REPORT

NBS PROJECT | **NBS REPORT**

58730-11-5870138 | November 1964 | 8701

MICROWAVE DISCHARGE CAVITIES

OPERATING AT 2450 MHz

F. C. Fehsenfeld, K. M. Evenson, and H. P. Broida

IMPORTANT NOTICE

NATIONAL BUREAU OF STAN
for use within the Government. Be
and review. For this reason, the pı
whole or in part, is not authorizec
Bureau of Standards, Washington, D
the Report has been specifically pre

Approved for public release by the director of the National Institute of Standards and Technology (NIST) on October 9, 2015

accounting documents intended
ɔjected to additional evaluation
ting of this Report, either in
ffice of the Director, National
ıe Government agency for which
es for its own use.

U.S. DEPARTMENT OF COMMERCE

NATIONAL BUREAU OF STANDARDS

TABLE OF CONTENTS

Abstract 1

Introduction 1

The Cavities 2

Operating Characteristics 7

Conclusions. 10

References 12

Table I 13

Table II 14

Figures 1 through 7b . . . . . 15 - 27

MICROWAVE DISCHARGE CAVITIES OPERATING AT 2450 MHz

F. C. Fehsenfeld

Central Radio Propagation Laboratory

K. M. Evenson

Radio Standards Laboratory

H. P. Broida*

Five simple microwave cavities for producing discharges in gases were tested in He and H_2 at pressures from one micron to one atmosphere. Three of the cavities are commonly used, and two have been recently designed. One of the newly designed cavities offered a considerable improvement over early models with respect to compactness, ease of attachment to the system, and efficiency.

INTRODUCTION

During the past several years the microwave discharge has found increasing application as an excitation source for gaseous electronics studies, for light sources, and for the production of free radicals. This discharge source has many attractive characteristics: (1)

---

* Physics Department, University of California, Santa Barbara.
Supported in part by the Advanced Research Projects Agency and the Office of Naval Research.

it produces a high degree of ionization and a large amount of molecular dissociation without undue heating of the background gas; (2) with no need for internal electrodes, it is possible to construct reaction vessels which are simpler, more free from contamination and less subject to damage; (3) it produces little electrical interference, and (4) the source presents no dangerous high voltage which can be easily contacted.

Many early sources were fashioned from government surplus radar equipment, but usually considerable knowledge of microwave techniques was required to procure and assemble an adequate system. The need for an inexpensive, uncomplicated source of CW microwave power was finally satisfied to a great extent through the use of medical diathermy units which supply a maximum of about 125 watts at 2450 MHz.

Much of the versatility of this power source rests on the proper choice of discharge cavities. It is the purpose of this paper to describe three existing and two relatively new cavity designs and to compare their operation in various gases at different pressures.

THE CAVITIES

The five basic cavities which were tested are shown in the photograph in Fig. 1. Except for the modified cavity 2a, designated 2b, the cavities are arranged in chronological order with respect to their development. The object of all modifications was to produce an effective, compact discharge source. The progress toward the latter

objective can be seen in Fig. 1. Cutaway drawings of each of the cavities are shown in Figs. 2 thru 7. The cavities will be discussed individually in order of their listing in Fig. 1.

Some of the basic features of the cavities are listed in Table I. (Designations of the cavities were obtained from Ramo and Whinnery[1].) Table I gives the microwave configuration of the cavities, the tuning adjustments which are incorporated, and indicates whether the cavity may be removed from the discharge tube without breaking the vacuum system.

All of these cavities were designed to produce discharges in a tube 13 mm o. d. since this size glassware has been found to be convenient. However, the cavities may be modified to accommodate larger or smaller discharge tubes. In each cavity the glassware is located in a region of strong electric field.

Cavity 1 (Fig. 2) was one of the earliest microwave excitation sources used in this laboratory[2]. The slot cut in the narrow portion of the cavity provides the useful feature that the cavity may be placed in position and removed without breaking the gas handling system. Best operating conditions usually are obtained when the discharge tube is placed mid-way along the slot near the edge (not as shown in Fig. 1). A screw in the coupling probe permits adjustment of the probe depth to achieve best coupling.

Cavity number 2a (Fig. 3) has been in use several years[3-6]. In this cavity the discharge is struck in the gap between the fixed and movable inner cylinders inside which the discharge tube slips (see Fig. 1). The tuning of 2a is accomplished by variation of the gap distance between the movable inner cylinders. In order to obtain a good, uniform electrical connection between the outer conductor and the variable inner conductor, a teflon-based set screw has been added. Moreover, setting this screw prevents detuning the cavity by accidental movement of the variable inner conductor. The hose fitting on the coaxial connector allows cooling air to be blown through the cavity to prevent overheating of the discharge tube. The hole in the outer cylinder of the cavity permits the observation of light from the discharge region. It might be mentioned that the hole in the inner conductor of this cavity is a waveguide beyond cutoff at 2450 MHz. Since the plasma is generally confined to the gap region, this cavity effectively contains the microwave radiation.

Cavity 2b (Fig. 4) is identical to 2a except for the addition of an adjustable matching stub which is located on the coaxial connector opposite the hose fitting (see Fig. 1). In 2b the tuning is accomplished by the simultaneous adjustment of the matching stub and variation of the gap distance.

Cavity 3 (Fig. 5) is a foreshortened radial line loaded by the capacitance of the 1/4" - 28 tuning screw[1,7]. As in 2a a teflon-based

set screw was provided to obtain reproducible, uniform tuning and locking. Positioning of the off-axis hole was arrived at by a trial and error method to give the most intense discharge. Tight magnetic field coupling between line and cavity is achieved by the large inductive loop. An air hose connection is placed on the coaxial connector to provide cooling for the discharge tube.

Cavity number 4 (Fig. 6) was recently developed. Change in coupling is accomplished by means of a matching stub located on the coaxial connector. Additional changes in the coupling can be effected by adjustment of the shaped probe. A piece of 3/8'' brass tubing is located on the body of the discharge source to allow cooling air to be directed on the discharge tube. The removable cap permits the unit to be positioned without breaking the vacuum system. It should be noted that this cavity is not a resonant cavity in the sense of the other discharge cavities. While the other cavities were designed to operate at 2450 MHz and perform only over a limited band about this frequency, cavity 4 has worked well over a band width greater than 1000 MHz.

Cavity 5 (Fig. 7) is also of recent development. The resonant frequency of the cavity is adjusted by means of the tuning stub and the coupling by means of an adjustable coupling slider. Because of the loading of a cavity produced by the discharge, both these adjustments are necessary if a cavity is to be efficient over the widest range of pressures. The wide operating range achieved by this cavity is due to

the presence of both adjustments. In tuning the cavity with the discharge in operation, the tuning stub is adjusted for a minimum reflected power with the minimum probe penetration. Next the probe is adjusted. Since these two operations are not independent, successive readjustment will improve the efficiency. In the case of a glass discharge tube, optimum tuning is obtained with the end tuning stub about 5 mm from the discharge tube and the metal end of the coupling slider located about half way between the end of the coaxial line and the tuning stub. In adjusting the coupling probe two minima may occur in the reflected power. The one corresponding to maximum coupler penetration is associated with arcing between the tuning stub and the coupling probe and should be avoided. Cooling air is directed on the discharge through the tube located in the body of the source. The removable cap allows the unit to be positioned without breaking the vacuum system.

This cavity possesses one design feature which may require slight modification of the microwave power generator. To simplify construction, this cavity does not have a positive dc short from the inner coaxial cable to the outer conducting shield. Most medical diathermy units require this short before power is supplied to the magnetron. This is to prevent the magnetron from working into an open line which would reflect a large amount of power into the magnetron and shortening its life. To bypass this feature the anode of the magnetron may be directly shorted to ground around the relay. To prevent

damage to the magnetron the microwave power supply should be turned off before one disconnects the cavity.

OPERATING CHARACTERISTICS

In order to provide information on which of these discharge cavities is most effective the following measurements are reported in Table II. (1) The pressure range between 1 micron and 1 atmosphere in hydrogen and helium over which the discharge can be maintained; and (2) the percent of power reflected from the discharge cavity operating at pressures of 0.1, 1, 10, and 100 mm Hg. In the pressure range measurements, the pressure of helium or hydrogen was allowed to slowly increase or decrease until the discharge was quenched. Since operating conditions change with variations in pressure, the cavity tuning was readjusted to maintain a minimum in the power reflected from the cavity. Since the percent of reflected power over this pressure range was similar for air, N_2, O_2, H_2, Ar, and He, only the results for He are given in Table II. The reflected, as well as the incident power, was measured using a bidirectional power meter located at the output of the microwave power generator. In general, this minimum reflected power produced the strongest discharge for a given input power. Full microwave power was used in both tests.

The measurements were made in slowly flowing gases (1 to 20 Atm. cc/sec in 13 mm o.d. vycor tubing). Pressures above 1 mm Hg

were measured with an aneroid manometer, while pressures below 1 mm Hg were measured with a heat conductivity gauge. It should be noted that these measurements were made using reagent grade cylinder gases. In situations where high gas purity is maintained or in which different glass tubing is used, the pressure range over which the cavities operate may be greatly changed. Accordingly, the results which are quoted should be considered indicative only. Although in all of the cavities the discharge may start spontaneously, it may be initiated over a wider range of pressures with the aid of a Tesla coil.

In the pressure range measurements only the results for helium and hydrogen are given in Table II. However, similar measurements were made in oxygen, nitrogen, and air. In the latter gases the discharge could be maintained in all cavities except cavity 1 to very high pressures. "Hot spots" in the discharge tube appeared at pressures of about 400 mm in hydrogen and oxygen and 600 mm in nitrogen. The presence of these "hot spots" was indicated by the appearance of the sodium yellow doublet in the emission spectrum of the discharge. Additional air cooling of the discharge vessel did not prevent this heating which could rather quickly melt the glassware. Heating was not observed in the rare gases, indicating that this effect was probably due to wall recombination.

Cavity 1 was found to be useful over a limited range of pressures in comparison with other cavities. This cavity was found to operate between 0.003 mm Hg and 48 mm Hg in nitrogen, and between 0.002 mm Hg

and 82 mm Hg in oxygen. In both these latter gases the other cavities maintained a discharge from less than 0.001 mm Hg to the pressure at which "hot spots" developed. In addition, even in the rare gases large amounts of power were reflected. This result indicates an inadequacy of the tuning adjustments. Accordingly, due to its cumbersome size and its relatively poor performance, cavity 1 is now seldom used in our laboratory.

Cavity 2a may be operated over a much wider range of pressures than 1. It gives satisfactory performance with oxygen, nitrogen, and hydrogen, operating at high pressures. This cavity operates most efficiently when the gas pressure is above 1 mm Hg. In cavity 2b the addition of the matching stub to this cavity considerably enhances its efficiency and extends the range of operation. This cavity is not as convenient to use as 4 and 5, nor as efficient as 5.

Cavity 3 operates over as great a range of pressures in the various gases as cavity 2. Cavity 3 operates most efficiently at low pressures. The measurements indicate the operation of cavity 3 in the low pressure region to be somewhat better than 2, while the reverse is true in the high pressure region. At higher pressures the discharge is confined to a region close to the wall of the discharge tube nearest the coupling loop. In this region heating of the glassware again was observed at high pressures. This cavity is about as convenient in use as 2.

Cavity 4 operates over a range of pressures as great as cavities 2 and 3. This result is shown in Table II. The matching adjustment arrangement is adequate, however, only at low pressures as shown. While 4 is as convenient to use as 5, it is not as efficient over as wide a range of pressures.

Cavity 5 exhibits the widest pressure range for operation and is nearly 100% efficient over this entire range. The high pressure limitation of the operation of this cavity in H_2 was imposed by the fact that the cooling used could not prevent the Vycor discharge vessel from melting. A strong discharge was produced by this cavity in low pressure hydrogen which was characterized by a spectrum consisting principally of emission from atomic hydrogen indicating its possible use as an atomic hydrogen light source.

CONCLUSIONS

In the preceding discussion five types of discharge cavities have been described. In each case the Q's of the cavities are relatively low (<1000). Their effectiveness arises from the fact that the cavity containing the discharge can be well matched to the microwave power source. In overall ability to produce a discharge in a wide variety of conditions, cavity 5 has proved to be most effective. Cavity 5 also is more convenient to use than 1 through 3. In all cavities except 1, a discharge could be maintained over a pressure range from about a

micron to near an atmosphere even such gases as N_2, O_2, and H_2. Cavities 3 and 4 performed somewhat better at pressures less than 1 mm while cavity 2 gave better results at pressures above 10 mm Hg. The operation of cavity 5 was superior over the entire range of pressures. Thus cavity 5 offers a considerable improvement over earlier models in all important respects.

In general the optimum tuning for initiation of breakdown does not correspond to the optimum tuning when the discharge is in operation. Careful tuning is advisable since, aside from the advantages derived from a strong, steady discharge, the deleterious effects of the reflected microwave power on connecting cables and the microwave power source is reduced. Optimum performance of all of the cavities is achieved only when good electrical contact is maintained in the various tuning adjustments and between the coaxial line and the cavity.

Fairly large amounts of microwave power may be radiated from these sources when the discharge is in operation. In fact, in all sources except 2a and 2b a discharge may extend several centimeters in the tube outside the cavity. For applications in which stray radiation is objectionable or hazardous[8,9], the addition of shielding sleeves along the discharge tube should prove worthwhile (household aluminum foil is quite satisfactory).

Many of the cavities described here have been used for several years by our colleagues and we are very much indebted to them for their valuable comments, assistance, and suggestions.

REFERENCES

1. Ramo, S., and J. R. Whinnery, Field Waves in Modern Radio, (John Wiley Sons, New York,) p. 438 (1953).
2. Broida, H. P., and M. W. Chapman, Anal. Chem. 30, 2049 (1950).
3. Zellikoff, M., P. H. Wykoff, L. M. Aschenbrand, and R. S. Loomis, J. Opt. Soc. Am. 42, 818 (1952).
4. Bovey, L, Spectrochim Acta 10, 432 (1958).
5. Radford, H. E., Phys. Rev. 126, 1035 (1962).
6. Worden, E. F., R. G. Gutmacher, and J. G. Conway, Appl. Opt. 2, 707 (1963).
7. Schmeltekopf, A. L., and H. P. Broida, J. Chem. Phy. 39, 1261 (1963).
8. Harvey, A. F., Microwave Engineering,(Academic Press, New York,)p. 973 (1963).
9. Mumford, W. W., Proc. IRE 49, 427 (1961).

TABLE I

Cavity Characteristics

Cavity	Electrical Configuration	Frequency Adjustment	Coupling Adjustment	Removable from glass discharge system
1	Tapered rectangular TE_{013}	No	Yes	Yes
2a	Foreshortened 3/4 wave coaxial	Yes	No	No
2b	Foreshortened 3/4 wave coaxial	Yes	Yes	No
3	Foreshortened 1/4 wave radial	Yes	No	No
4	Coaxial termination	No	Yes	Yes
5	Foreshortened 1/4 wave coaxial	Yes	Yes	Yes

TABLE II

Operating Characteristics

Cavity	Pressure Range (mm Hg) over which Discharge Source Operates.				Percent Reflected Power in He			
	He		H_2					
	Low	High	Low	High	0.1	1	10	100 mm Hg
1	0.07	600	0.04	28	78	28	4	15
2a	0.01	>700	0.03	240	50	30	18	10
2b	0.01	>700	0.02	400	46	5	4	4
3	<0.001	>700	0.01	210	22	56	63	55
4	<0.001	>700	0.01	250	<1	33	44	30
5	<0.001	>700	<0.001	>450	<1	<1	<1	<1

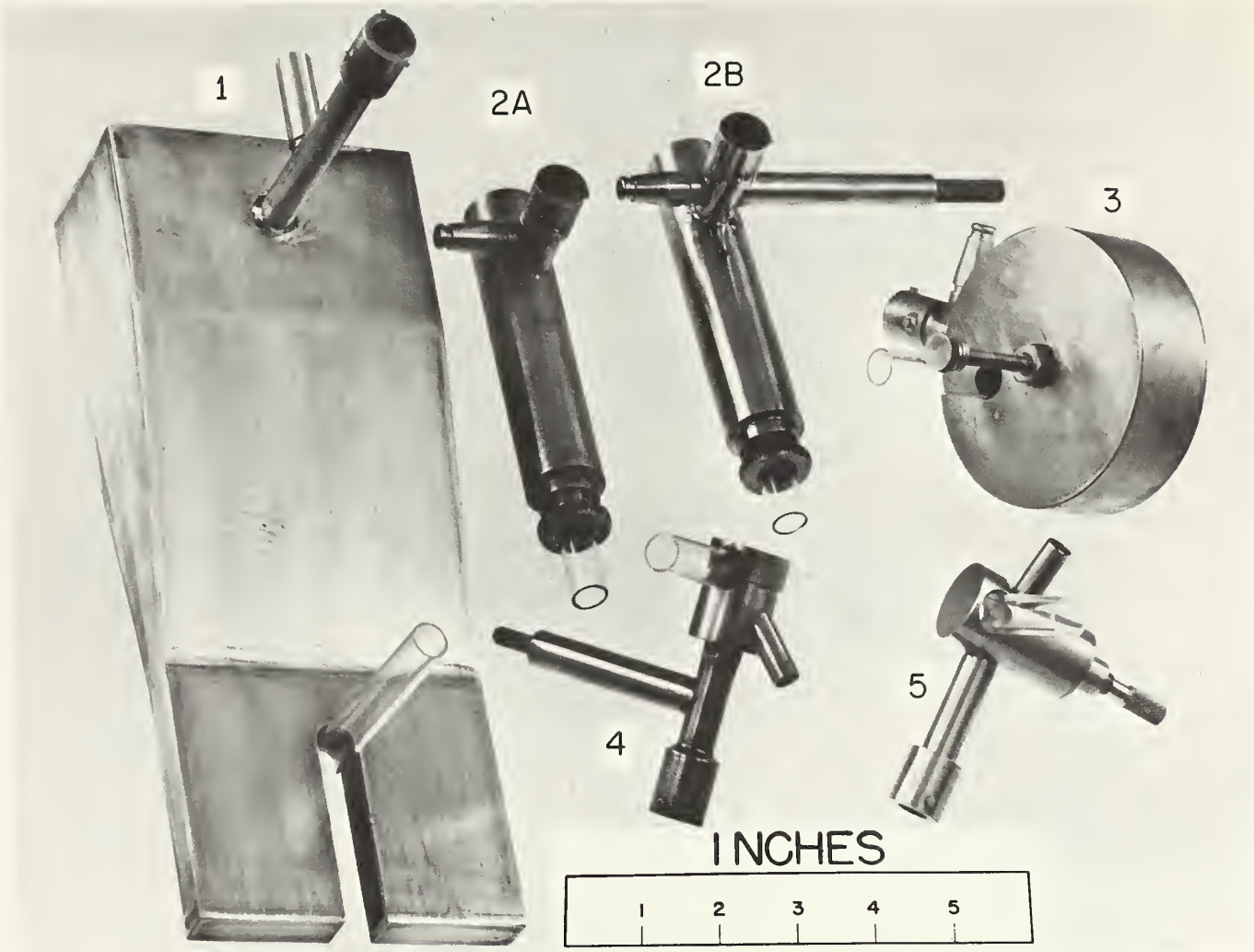

Figure 1. This photograph shows the relative sizes of the various cavities. The 13 mm o.d. pyrex tubing occupying the position of the discharge source adds perspective to the picture.

B- 46896

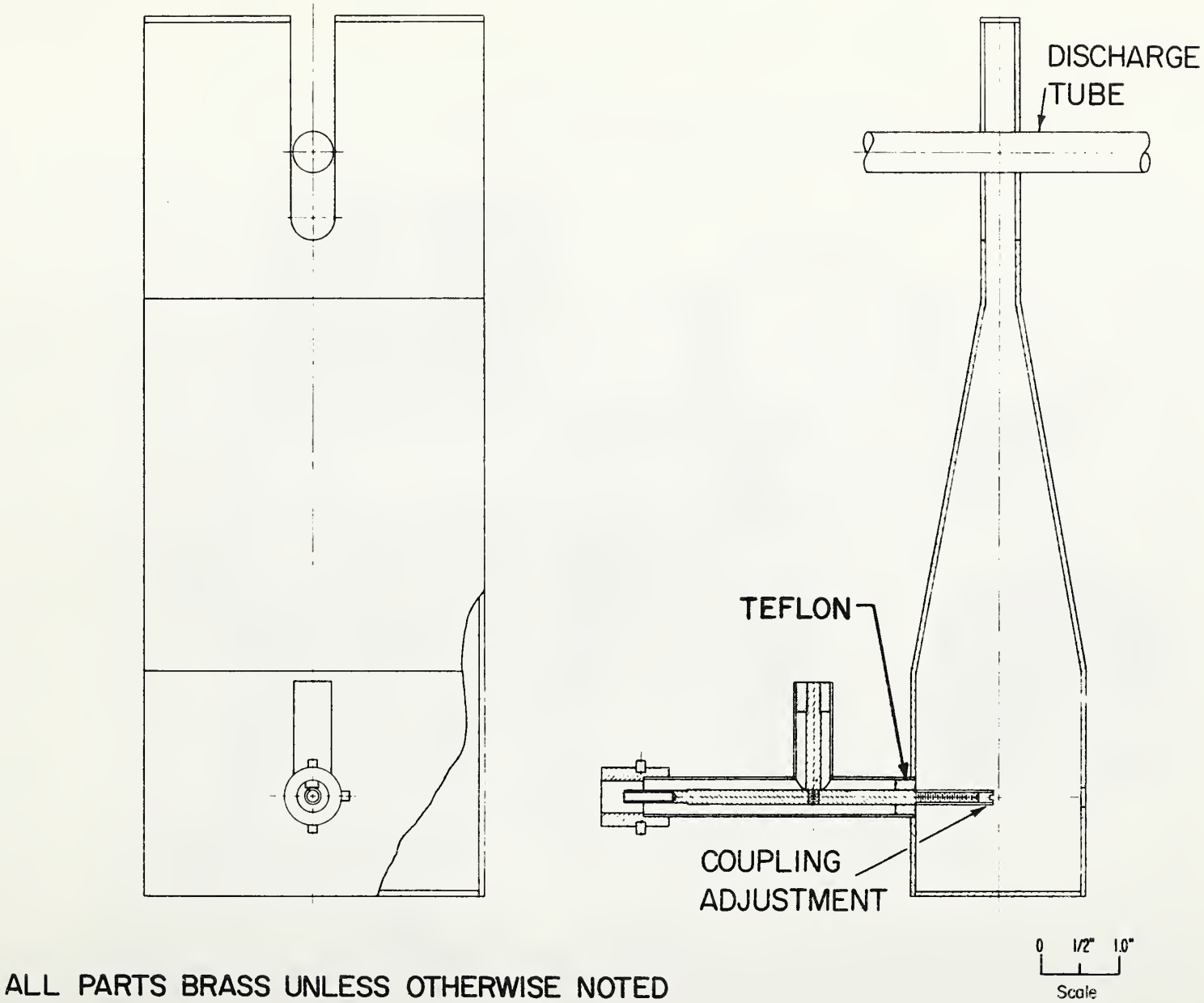

Figure 2a. A simple drawing of cavity 1.

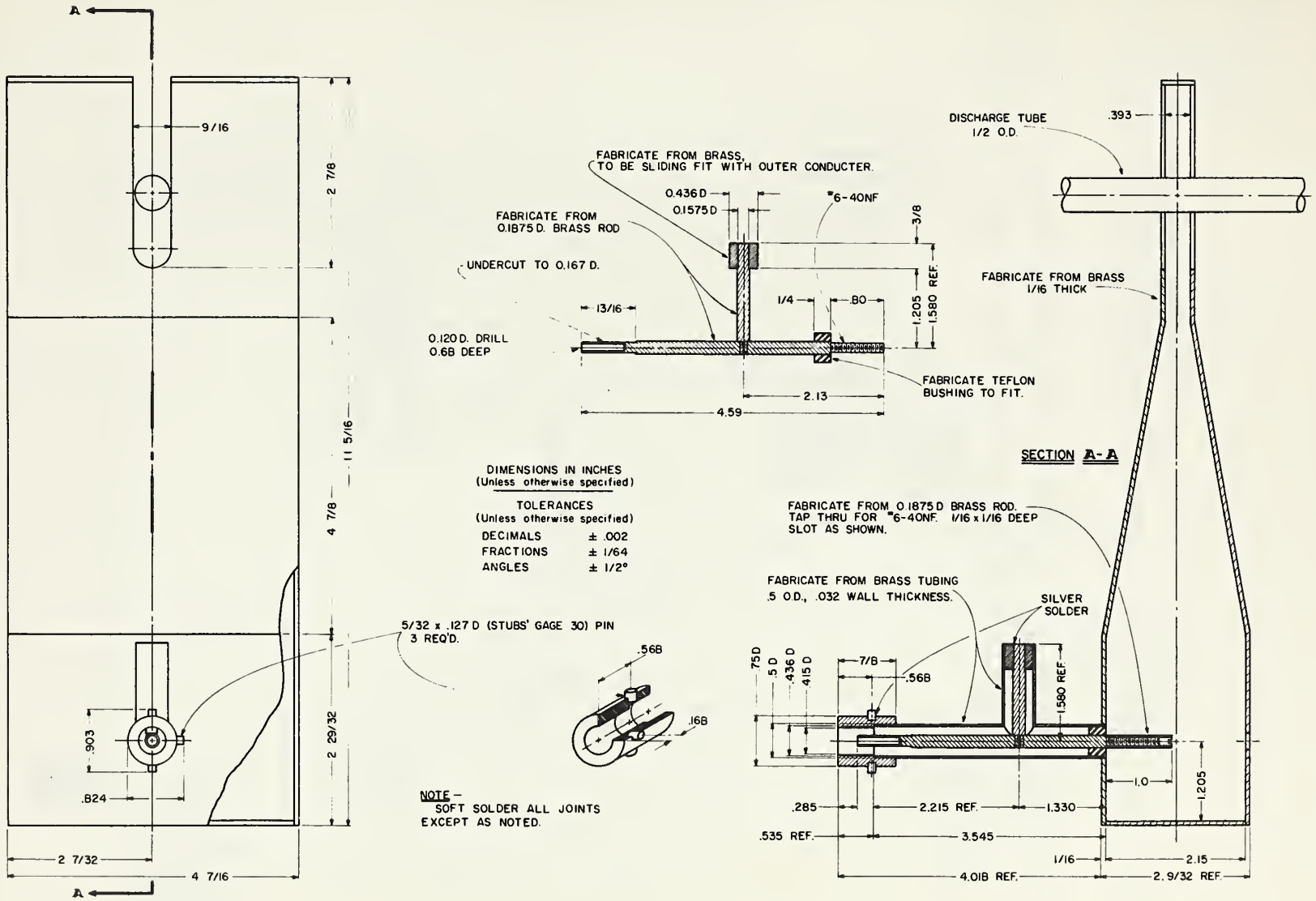

Figure 2b. A detailed drawing of cavity 1.

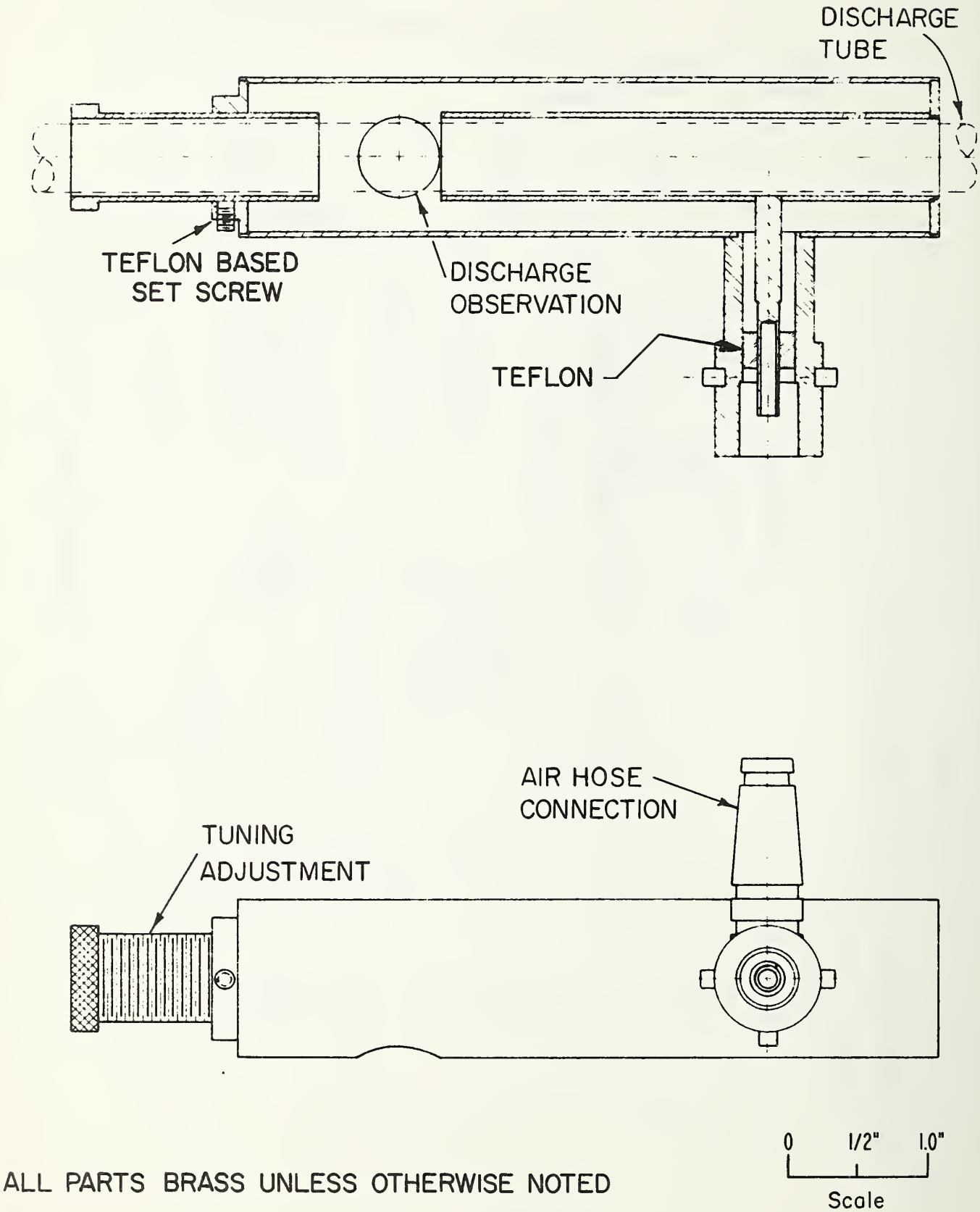

Figure 3a. A simple drawing of cavity 2a.

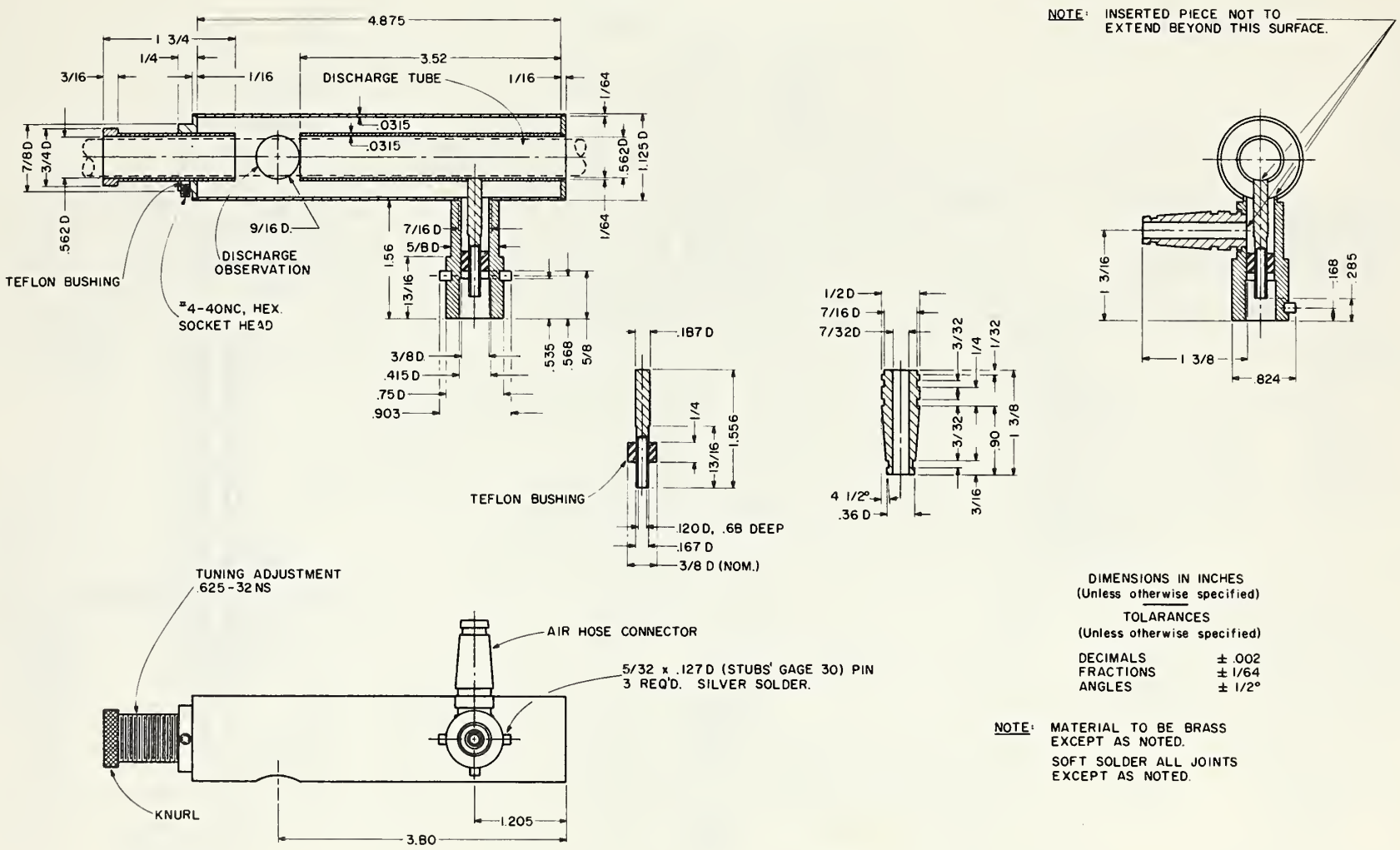

Figure 3b. A detailed drawing of cavity 2a.

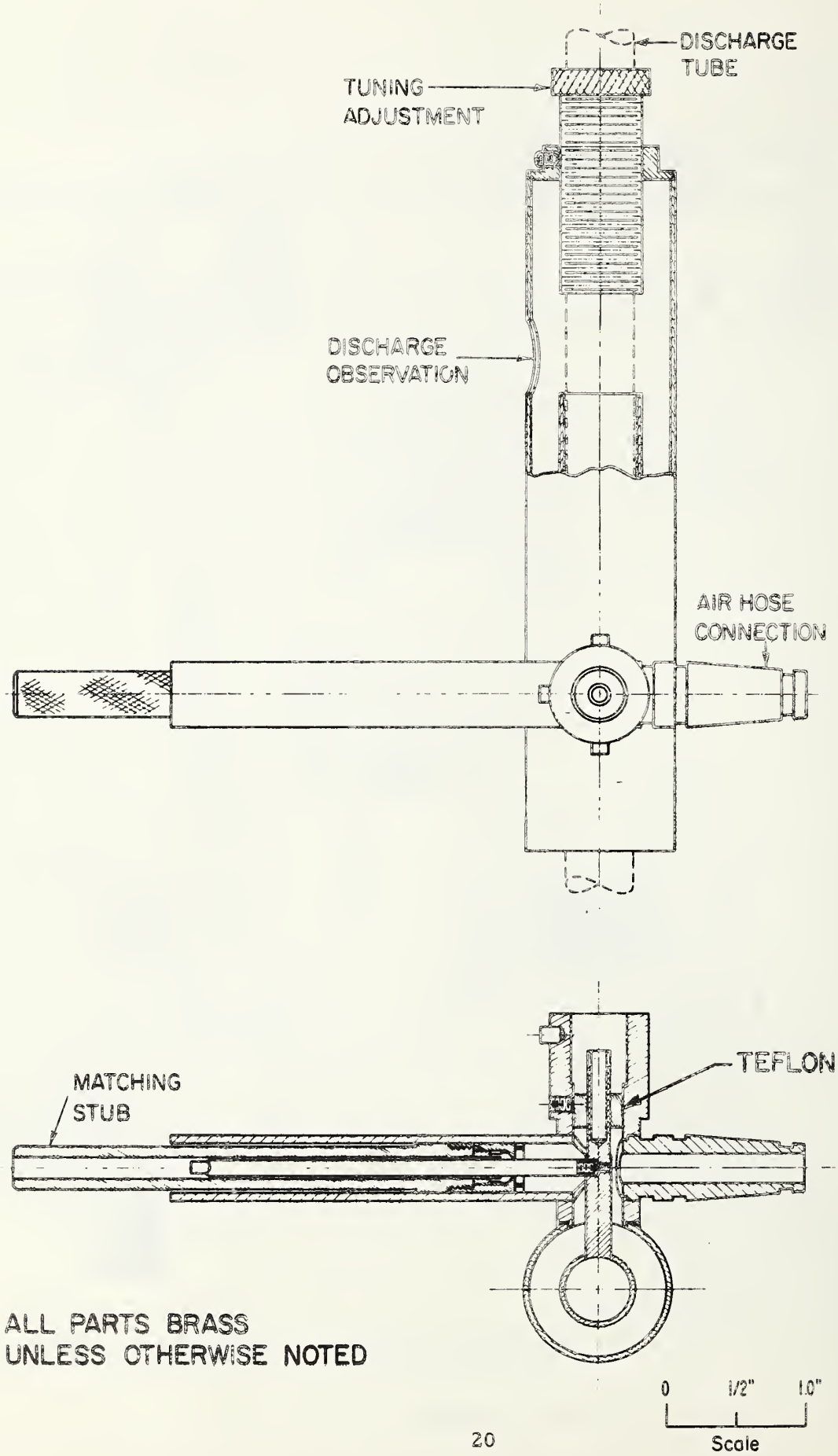

Figure 4a. A simple drawing of cavity 2b

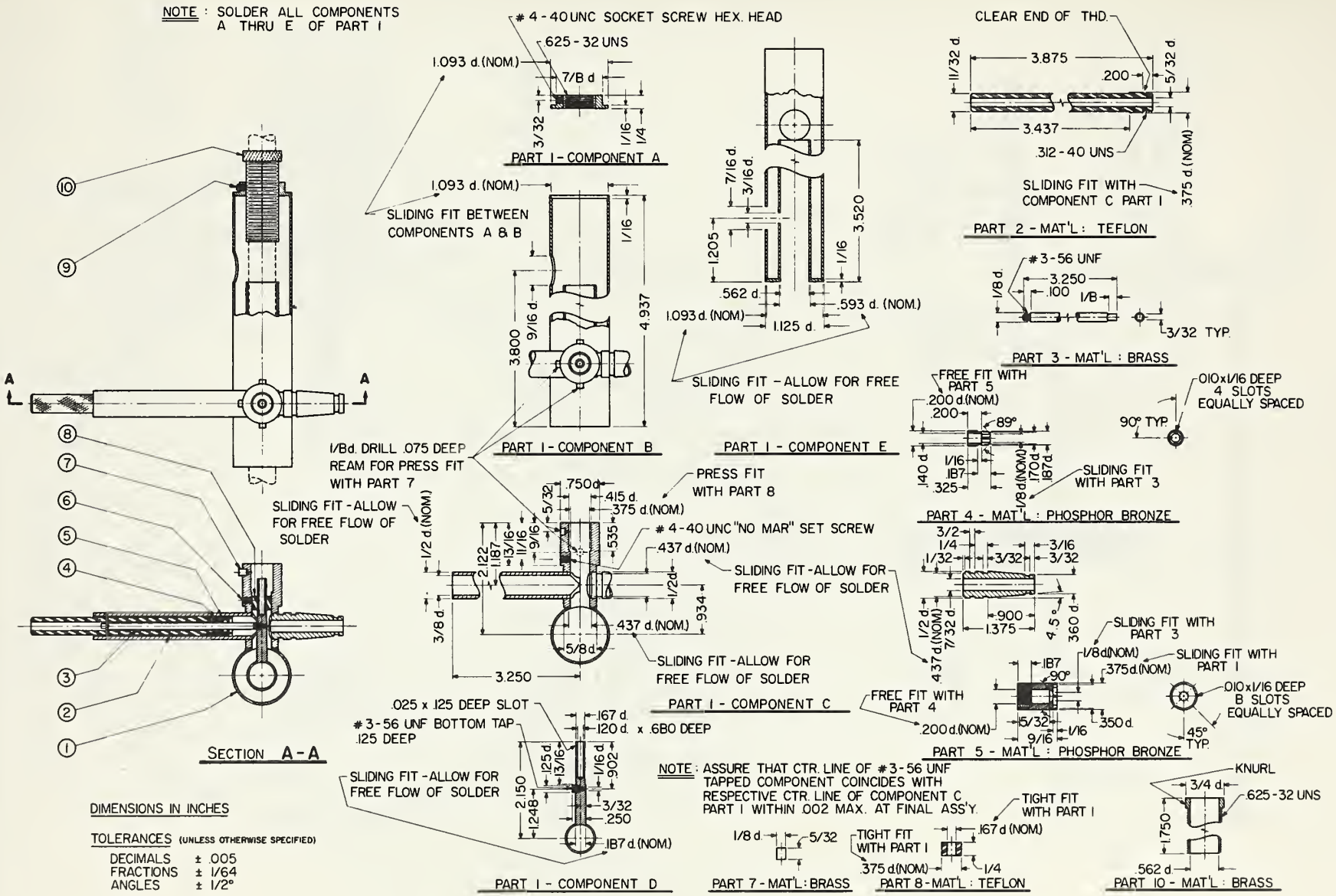

Figure 4b. A detailed drawing of cavity 2b.

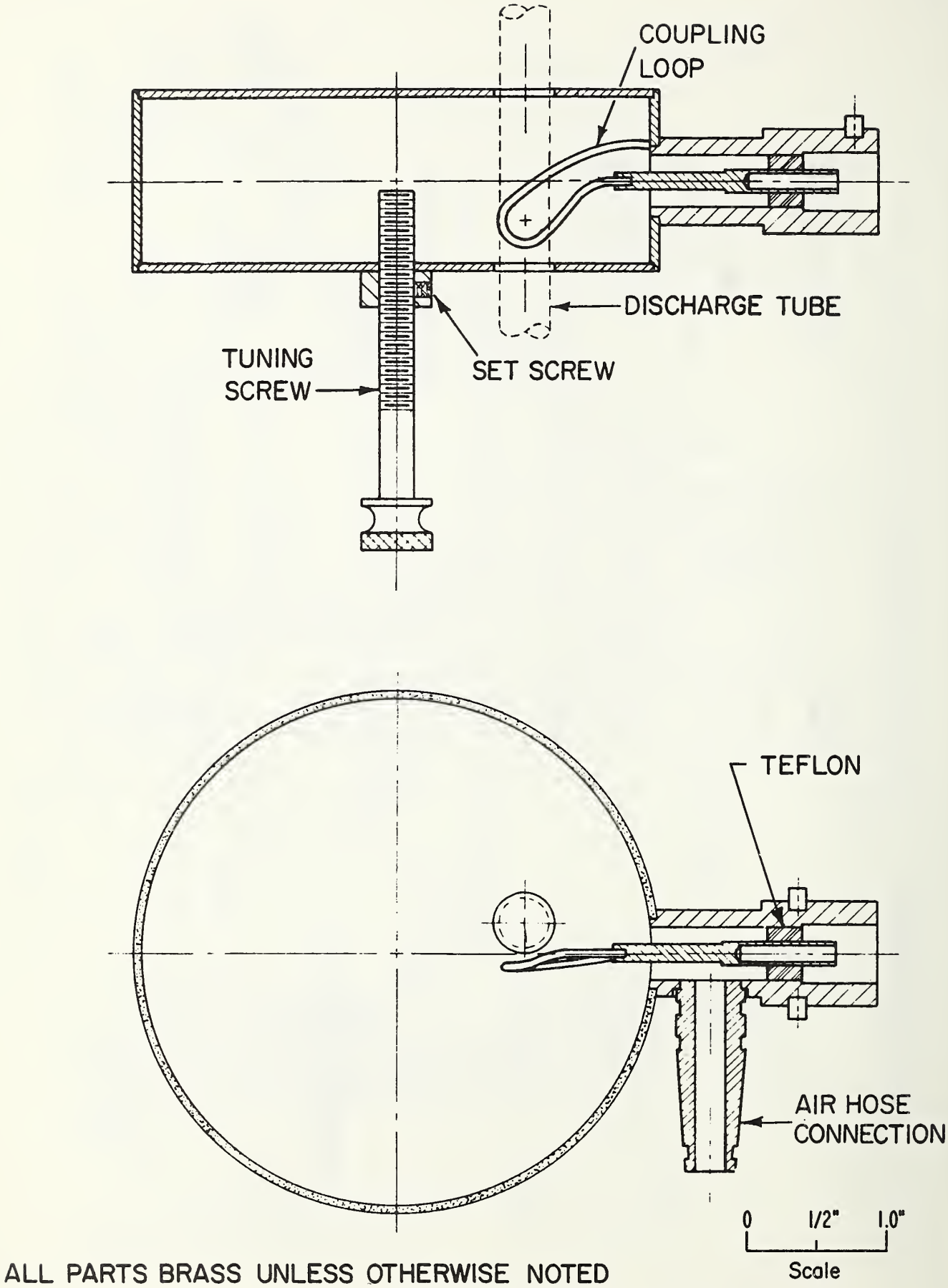

Figure 5a. A simple drawing of cavity 3.

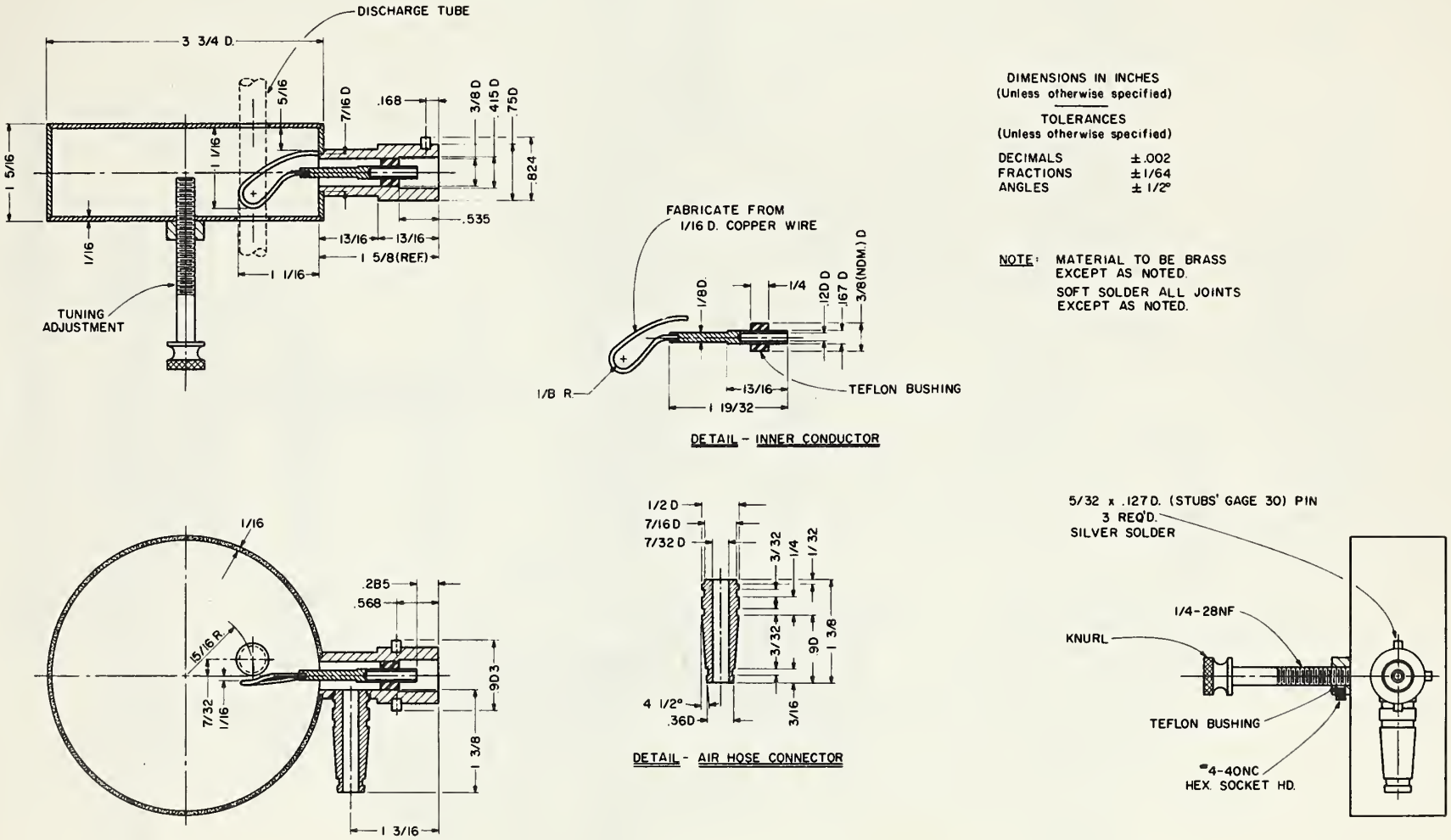

Figure 5b. A detailed drawing of cavity 3.

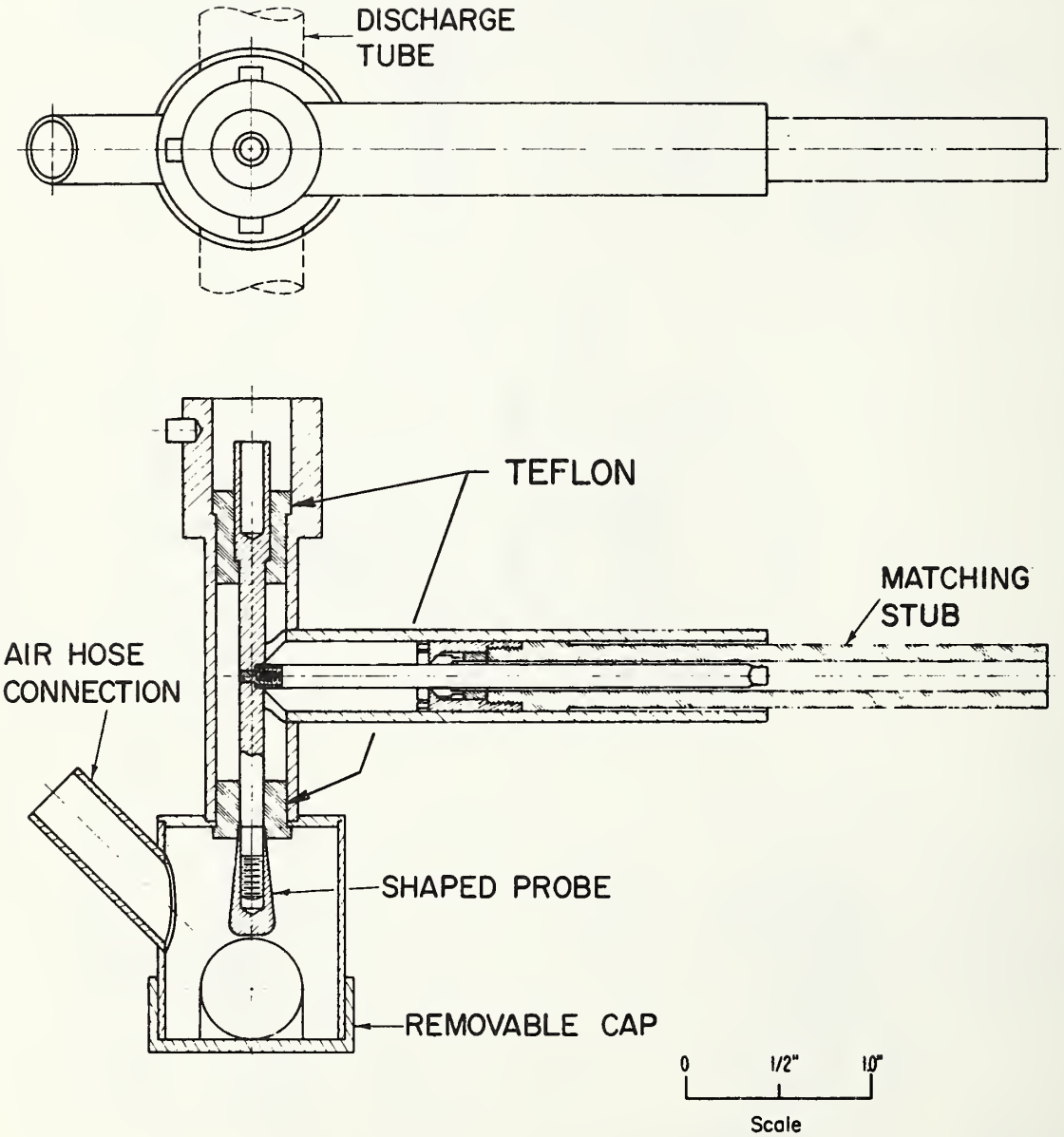

ALL PARTS BRASS UNLESS OTHERWISE NOTED

Figure 6a. A simple drawing of cavity 4.

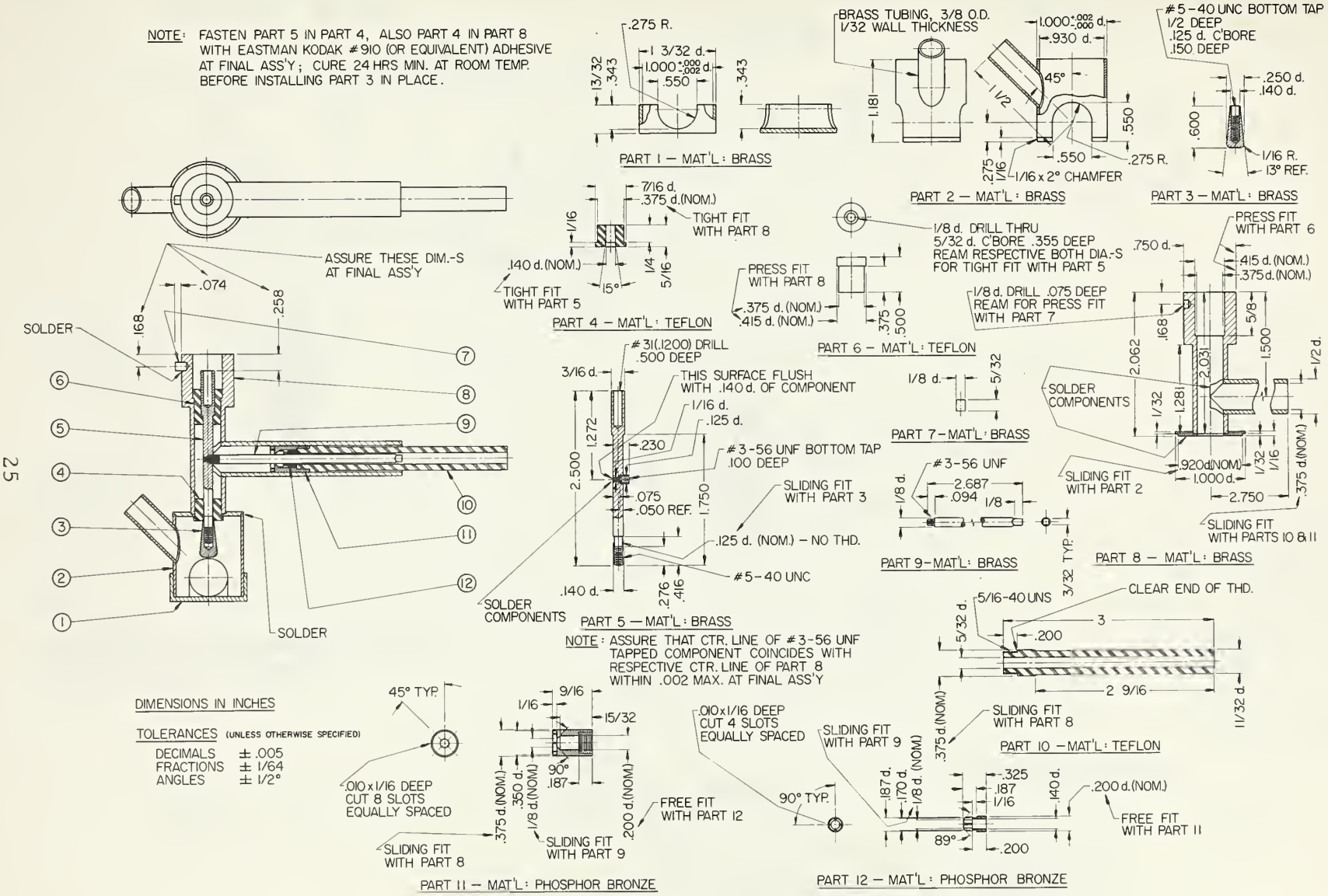

Figure 6b. A detailed drawing of cavity 4.

B- 44728

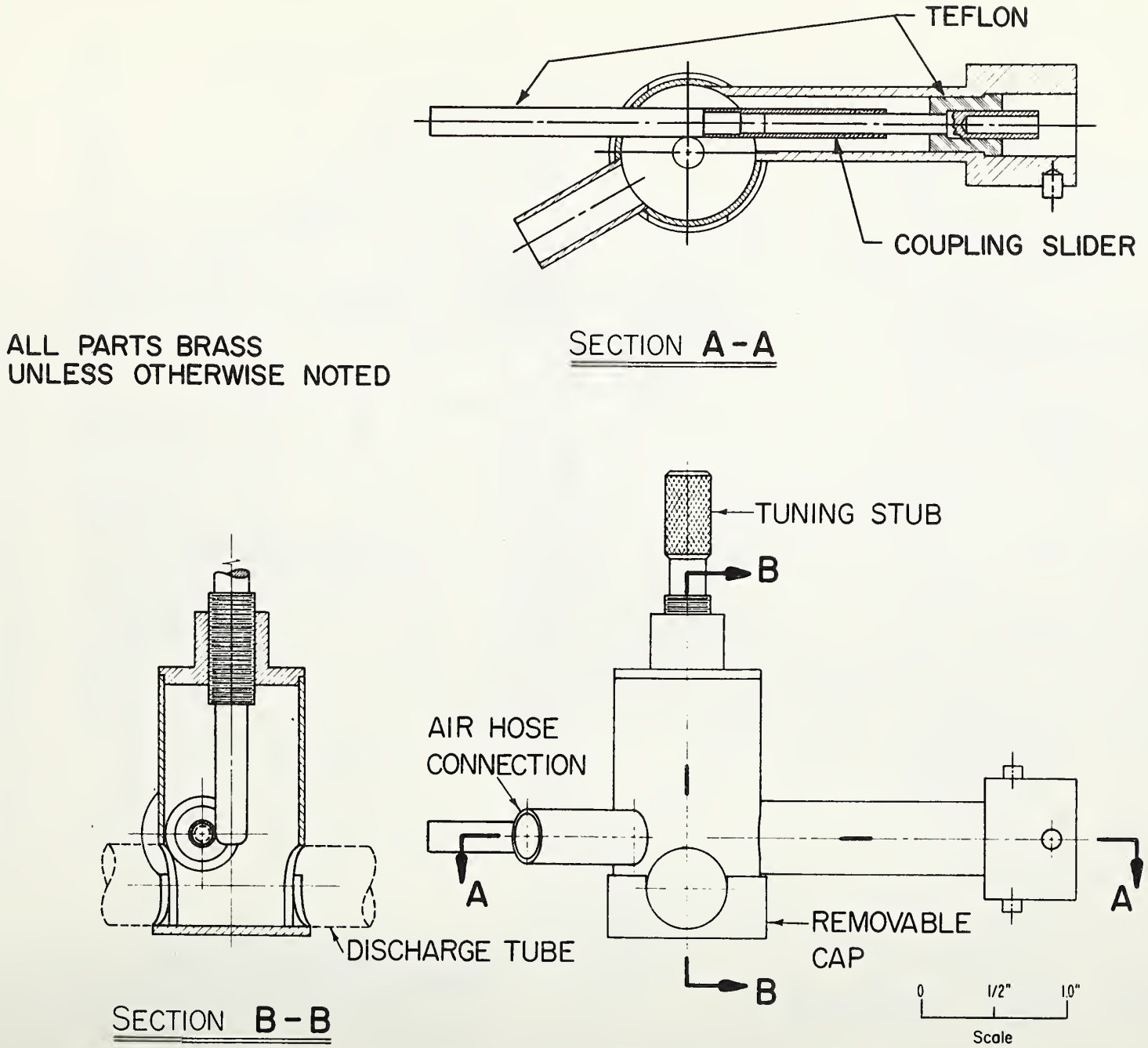

Figure 7a. A simple drawing of cavity 5.

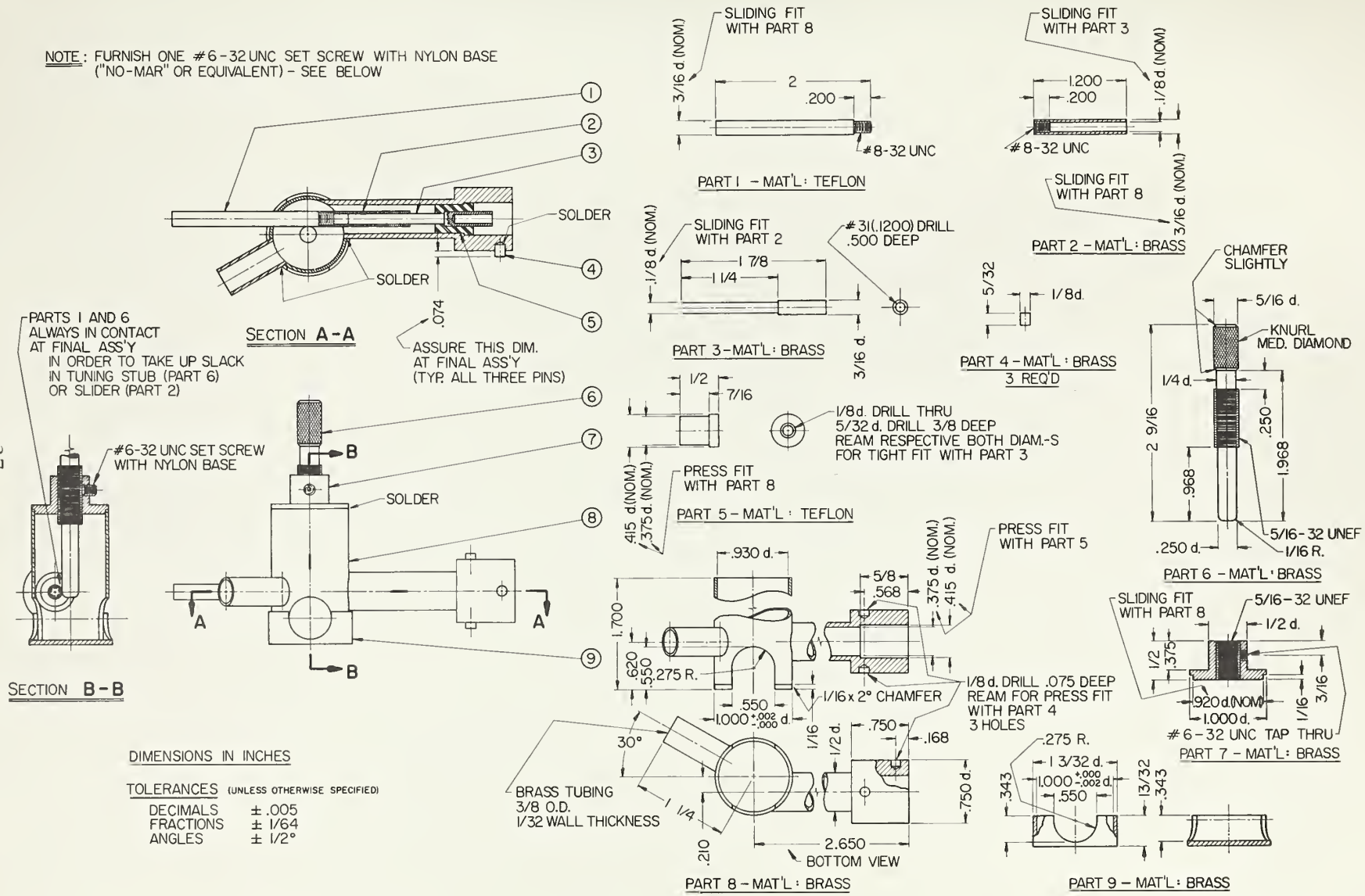

Figure 7b. A detailed drawing of cavity 5.

B-44440

DEPARTMENT OF COMMERCE
NATIONAL BUREAU OF STANDARDS